Showglass Alfa Kiosk

Datasheet

oemKIOSKS
Your white label kiosks company

Touch...The Sky

Welcome to oemKIOSKS

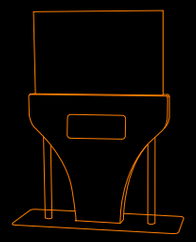

Version: 07_01_2011

Showglass Alfa

Interactivity ptaltform with large dimensions

Technical Specifications
Showglass Alfa Kiosk

Dimensions: H1800 x W1350 x D450
Weight: aprox. 50 Kg.

The Showglass model was developed for indoor use to work as a revolutionary dynamic advertising and multimedia system.

This model can be manufactured in stainless steel or painted steel (available in all RAL colors).

This kiosk was designed specifically to work as an innovative advertising system, which receives the image that is projected through a video projector. The Showglass also has an acrylic structure, with light in the front, for advertising (logo).

The dimensions of the image can vary, depending on quality and distance from which the projector is placed. However the Showglass is much more than a simple projection system of images, videos, websites, etc..

By placing an interactive foil on the glass where the image is projected, it is possible to transform the Showglass kiosk into an interactive Kiosk with large dimensions, impossible to achieve with LCD's and touchsreen monitors

With all these features the Showglass is specially suited for all types of applications where impact, size & interactivity are necessary.

The Showglass must be equipped with a computer and a video projector.

oemKIOSKS
Your white label kiosks company

CE

Showglass Alfa
Interactivity ptaltform with large dimensions

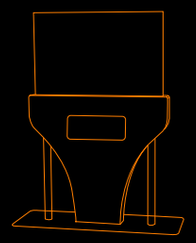

Showglass Alfa

Distance comparison and main features

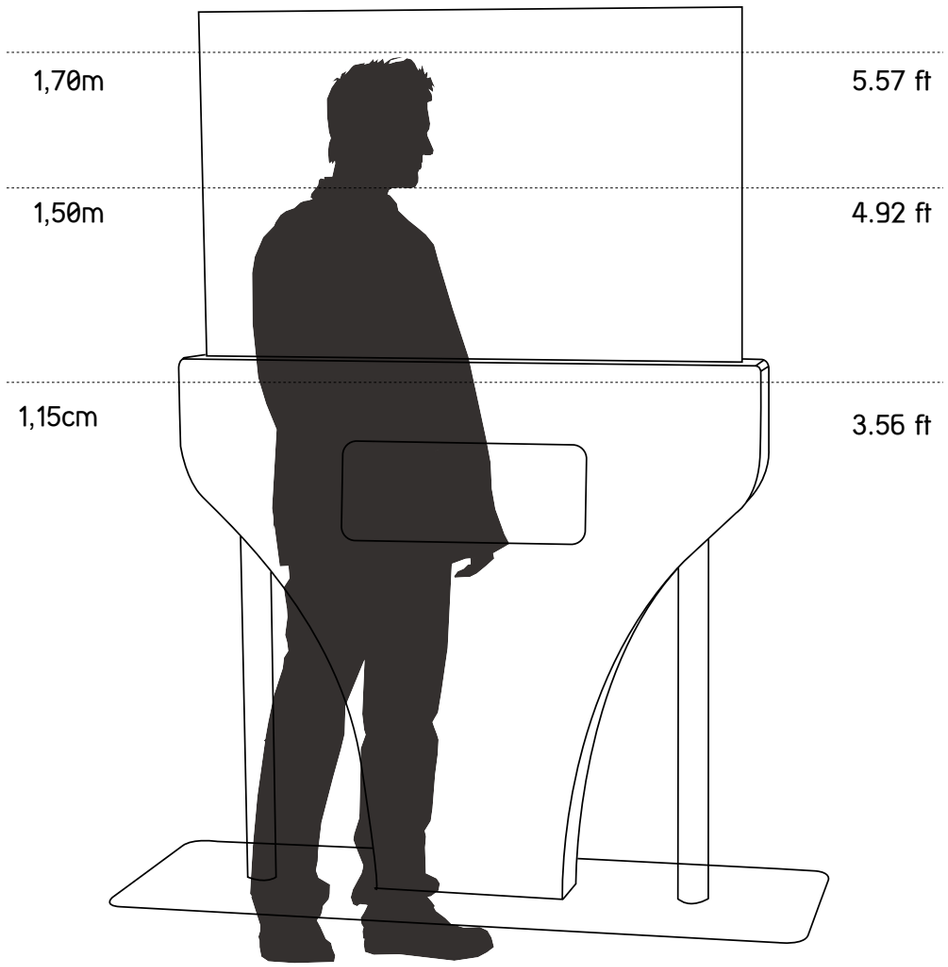

Type

- [x] Indoor

Materials

- [x] Painted Steel
- [x] Stainless Steel
- [x] MDF

Options

- [x] Display / Glass up to 108”
- [x] YdSignage Software
- [x] Directional Sound
- [x] Webcam
- [x] Proximity Sensor
- [x] Audience measurement
- [x] Interactivity / Touchscreen

(Other options available upon request)

oemKIOSKS
Your white label kiosks company

CE

Showglass Alfa
Distance comparison and main features

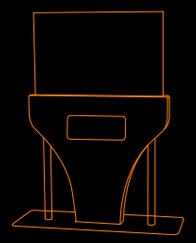

Showglass Alfa

Kiosk measures

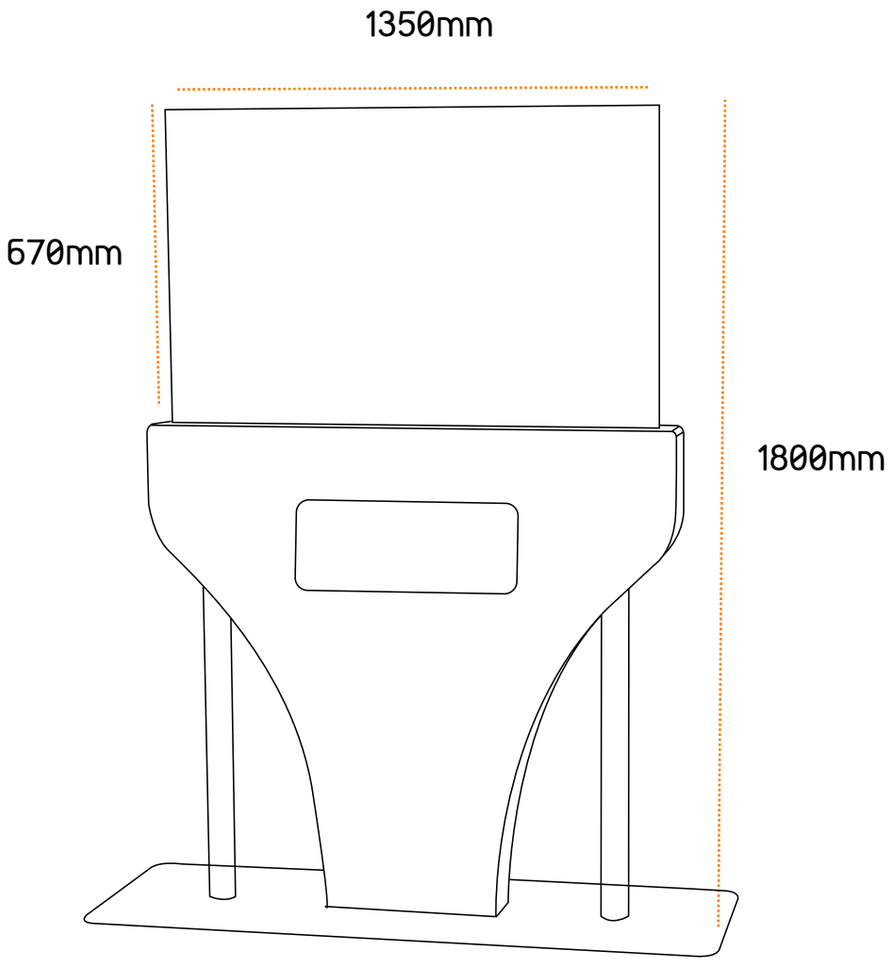

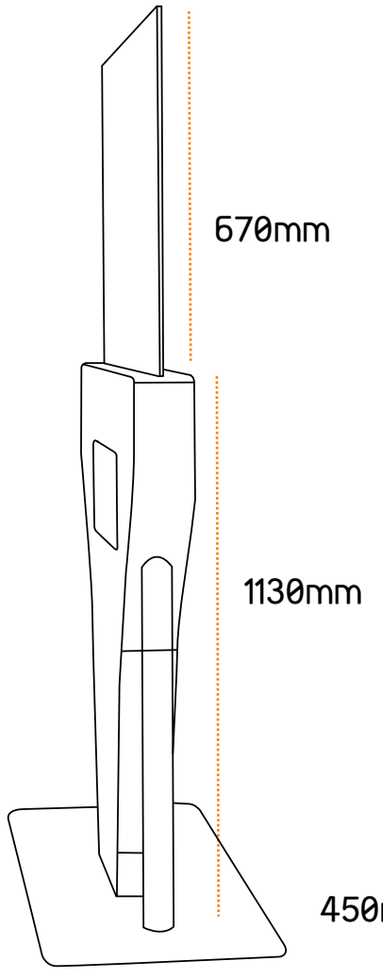

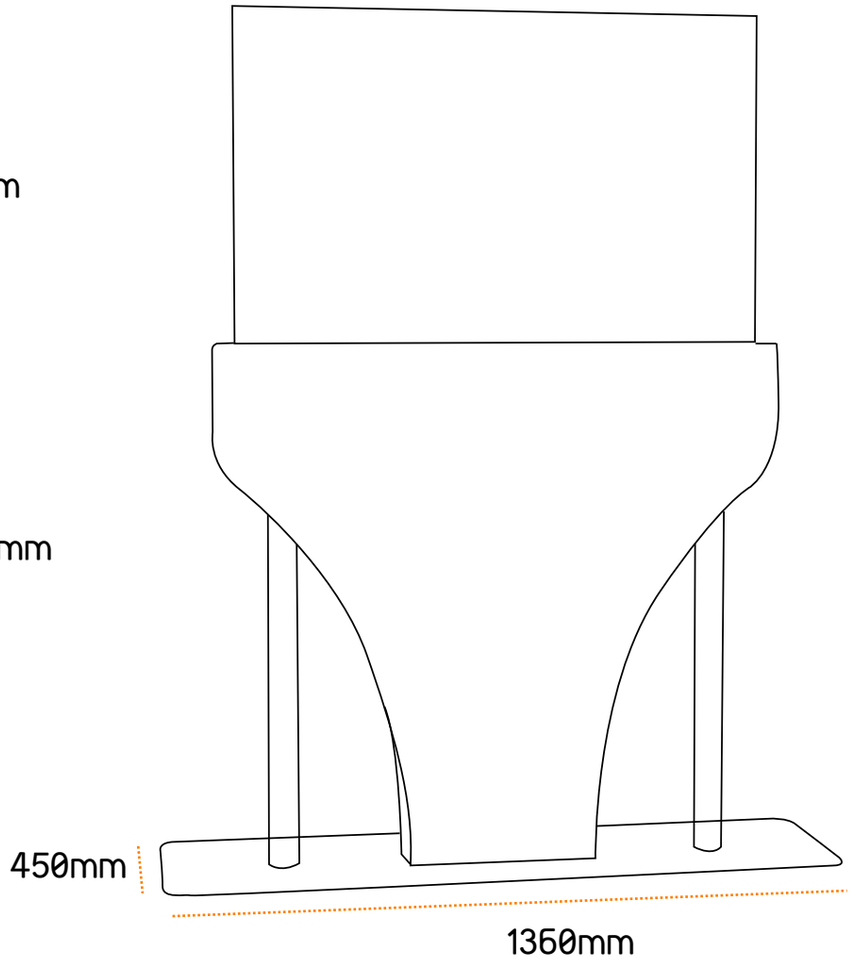

oemKIOSKS
Your white label kiosks company

CE

Showglass Alfa
Kiosk measures

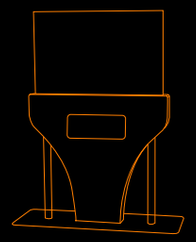

Showglass Alfa

Technical data

Dimensions:

- Display / Glass up to 108" (resolution: 1280 x 1024 Pixel)
- H1800 W1360 D450

Weight:

60 kg

Configuration:

- Interactivity ptaltform with large dimensions
- Stainless steel AISI304 or painted steel (RAL Colors)
- Steel plate of 1,5mm to 2,5mm
- Integrated speakers

Optional:

- Displays up to 108"
- Atom or Dual Core PC computer
- Microsoft Windows 7 Professional
- Ykiosk software package
- Interactivity / Touchscreen
- Wireless networking - WLAN
- Bluetooth functionality
- Webcam

- Other components can be integrated changing kiosk dimensions: ticket printer, coin validator, bill validator, card readers, antivandalic keyboard, proximity sensor, etc.

oemKIOSKS
Your white label kiosks company

CE

Showglass Alfa
Technical data

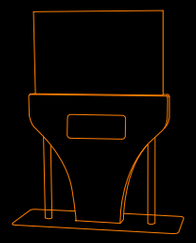

oemKIOSKS | Your white label kiosk company

This document is provided only for information purposes. The presented information is subject to change without prior notice, given the constant evolution of content.
THE PARTTEAM GROUP is not responsable for any errors or omissions in this document, based on the information it contains, as a result of its publication.

oemKIOSKS
Your white label kiosks company

oemKIOSKS | Partteam Group Portugal | Rua Nova da Nespereira, Pavihão 10 | 4770 -287 Lagoa - Vila Nova de Famalicão
tel: +351 252 378 589 | +351 252 327 185 | fax: + 351 252 378 591 | Portugal
www.oemkiosks.com | oem@oemkiosks.com