Yupad Kiosk

Datasheet

Welcome to oemKIOSKS

OEMKIOSKS®

DIGITAL KIOSKS FOR THE WORLD®

Touch...The Sky

Version: 14_11_2012

Yupad

The Multitouch Inovation

Technical Specifications
Yupad Kiosk

Dimensions: H210 x W320 x D37
Weight: aprox. 10 Kg.

The Yupad model is designed for indoor use only and to be integrated into an IPAD or any other Tablet PC. Could be used as an Information Point of the institution / company where it is installed, Internet acess point or for any application that can be developed for any Tablet.

It can also be used for public or private institutions to attend the clients where, somehow, a management service / waiting queues is needed, by simply installing a printer for tickets.

Through a glossy widescreen Multi-Touch 9.7-inch you can quickly see the information you are looking for.

The glass is scratch proof so, even when exposed to a massive use, will not damage the multi-touch screen.

This model can be manufactured in stainless steel AISI 304 or painted steel (available in all RAL colors) using steel plate of 1,5mm to 2mm.

The Yupad can be equipped with an A4 Apple Chip with 1 GHZ, high performance and low power, Wi-Fi (802.11 a / b / g / n), Bluetooth 2.1 + EDR, etc.

This model can be integrated with the IPAD or other tablets with different display sizes (7", 10", or others)

IPAD is a trademark of Apple Inc., registered in the U.S. and other countries

Yupad
The Multitouch Inovation

OEMKIOSKS
DIGITAL KIOSKS FOR THE WORLD®

CE

Yupad Floor

Distance comparison and main features

Technical Specifications
Yupad Floor Kiosk

Dimensions: 1015mm
Weight: aprox. 5 Kg.

The Yupad Floor model has all the features of Autick Pad but is embedded in a floor stand. The great advantage of this model is that don't requires another module to serve as support (table, counter, wall). Can be quickly assembled and placed anywhere. It is ideal for tradeshows, showrooms of companies, lobbys of restaurants and hotels, among others. The kiosk and support can be purchased along with a box for easy transportation.

The base may have holes that allow the attachment to the ground preventing the kiosk to fall. This support can be incorporated in both the vertica or horizontal Autick pad models.

Thus, the iPad or Tablet PC embedded will have continuous power (essential since it will be placed in public areas) once the power cord had been hidden inside the tube and below ground.

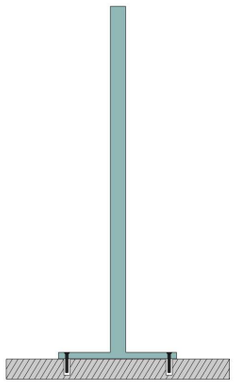

FIXING GROUND SYSTEM

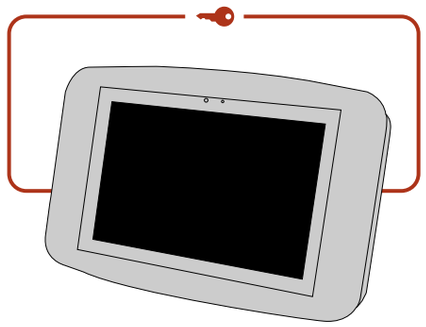

SECURITY LOOK

YUPAD FL1

YUPAD FL2

OEMKIOSKS
DIGITAL KIOSKS FOR THE WORLD®

IPAD is a trademark of Apple Inc., registered in the U.S. and other countries

Yupad Floor
Distance comparison and main features

Yupad

Faceplate Options

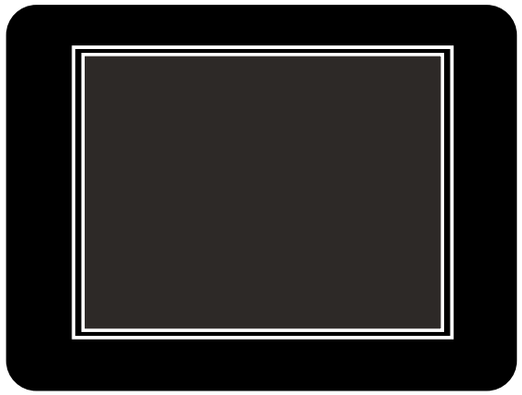

CLOSED HOME BUTTON WITH COVERED FRONT CAMERA

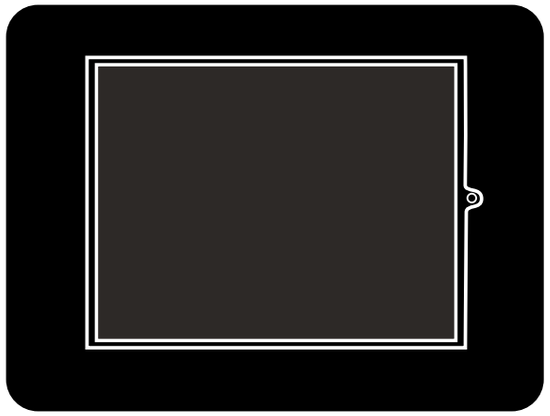

OPEN HOME BUTTON WITH COVERED FRONT CAMERA

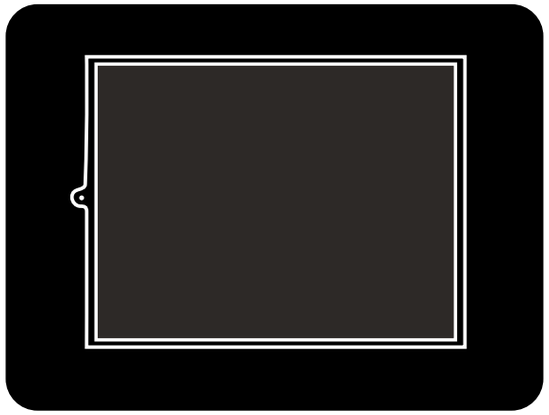

CLOSED HOME BUTTON WITH EXPOSED FRONT CAMERA

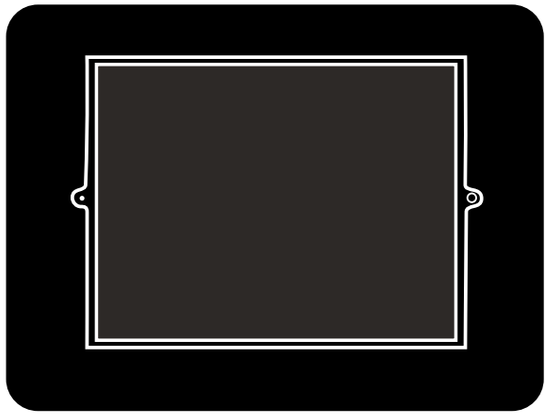

OPEN HOME BUTTON WITH EXPOSED FRONT CAMERA

OEMKIOSKS
DIGITAL KIOSKS FOR THE WORLD®

IPAD is a trademark of Apple Inc., registered in the U.S. and other countries

Yupad
Faceplate Options

Yupad

Distance comparison and main features

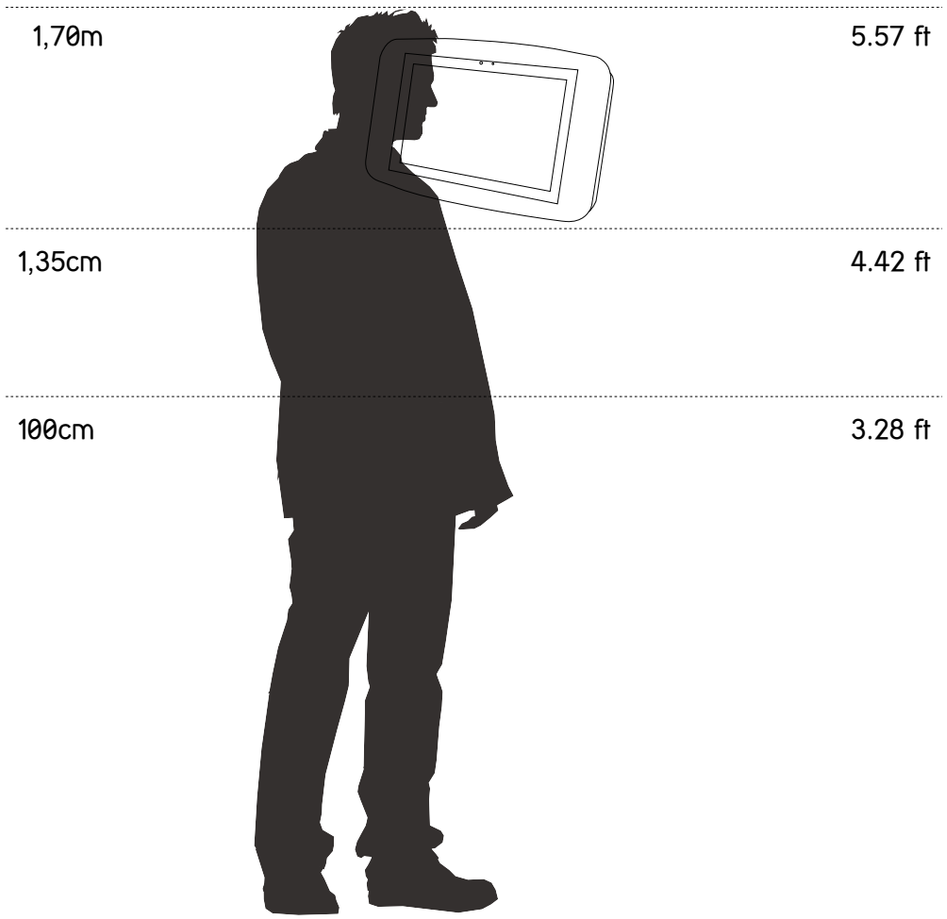

Type

- [x] Indoor

Materials

- [x] Painted Steel
- [x] Stainless Steel
- [x] MDF

Options

- [x] Ticket Printer
- [x] Card Reader
- [x] Bar Code Scanner
- [x] Chip Reader

OEMKIOSKS
DIGITAL KIOSKS FOR THE WORLD®

CE

IPAD is a trademark of Apple Inc., registered in the U.S. and other countries

Yupad
Distance comparison and main features

Yupad

Kiosk measures

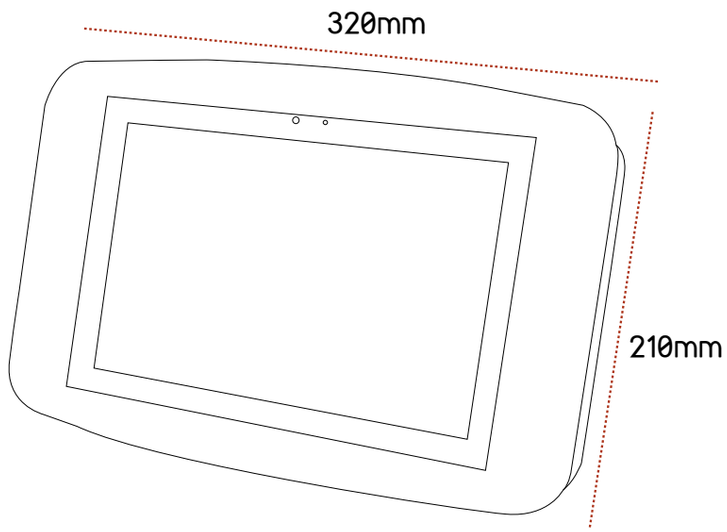

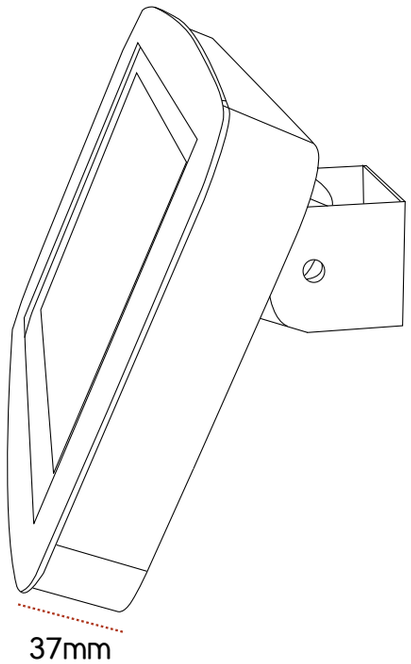

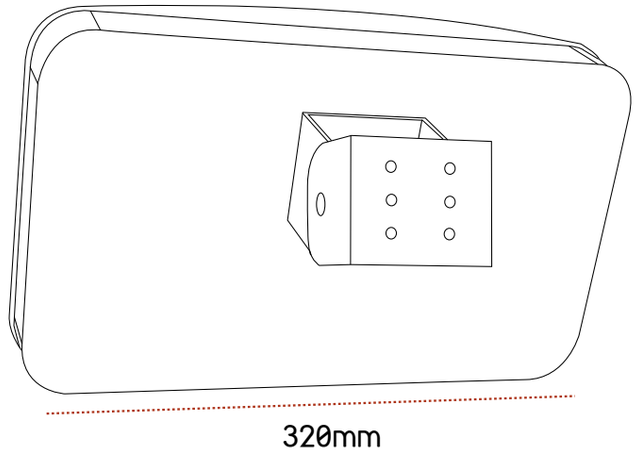

OEMKIOSKS
DIGITAL KIOSKS FOR THE WORLD®

CE

IPAD is a trademark of Apple Inc., registered in the U.S. and other countries

Yupad
Kiosk measures

Yupad Balcony

Kiosk measures

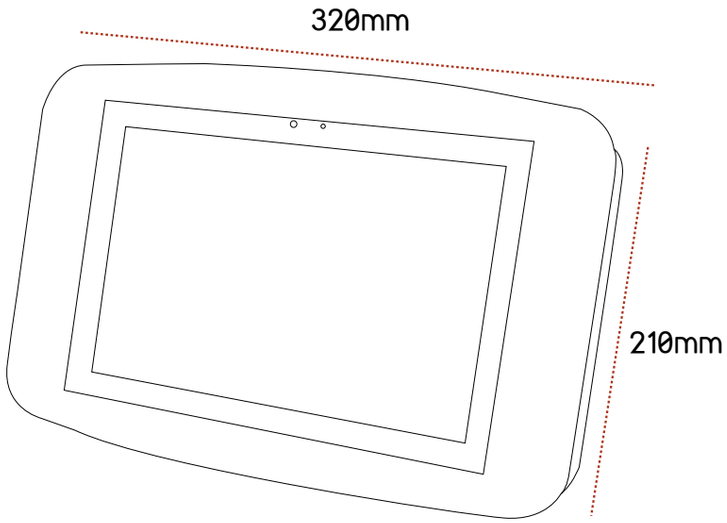

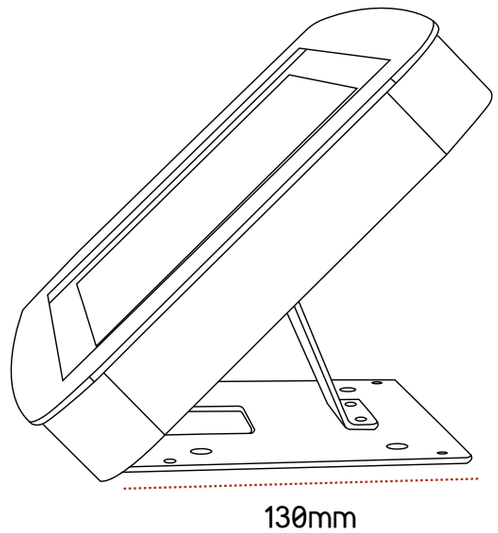

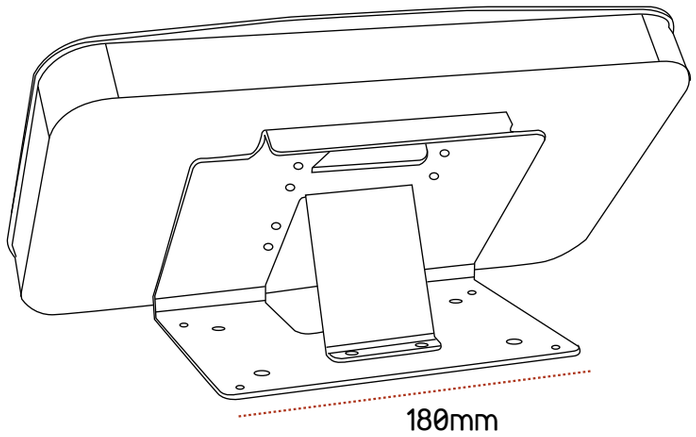

IPAD is a trademark of Apple Inc., registered in the U.S. and other countries

Yupad Balcony
Kiosk measures

OEMKIOSKS
DIGITAL KIOSKS FOR THE WORLD®

CE

Yupad Floor

Kiosk measures

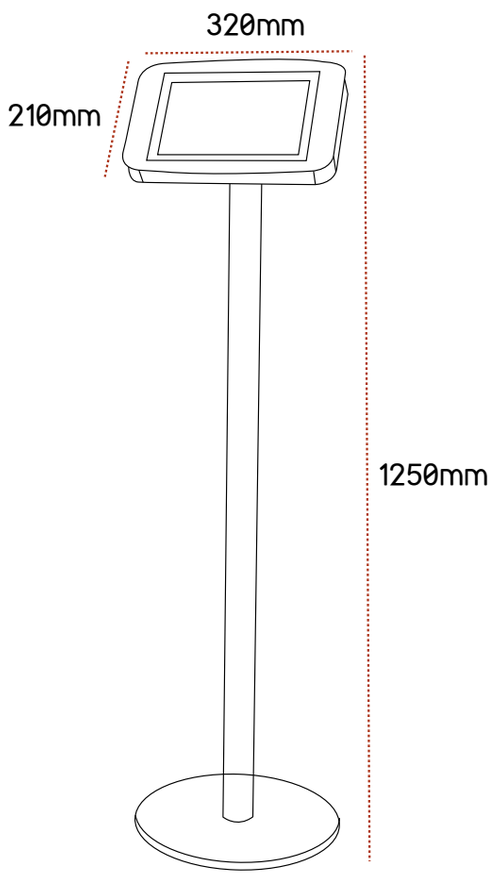

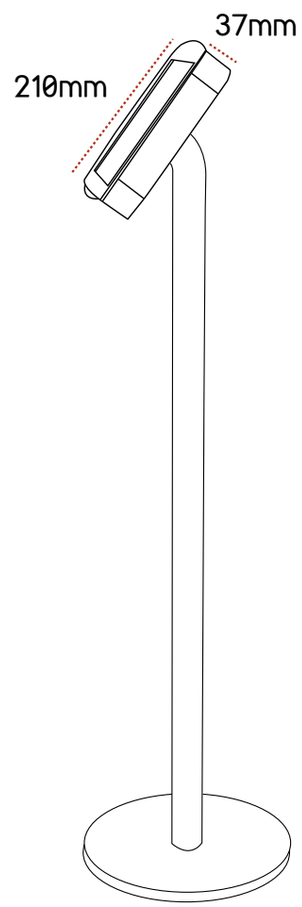

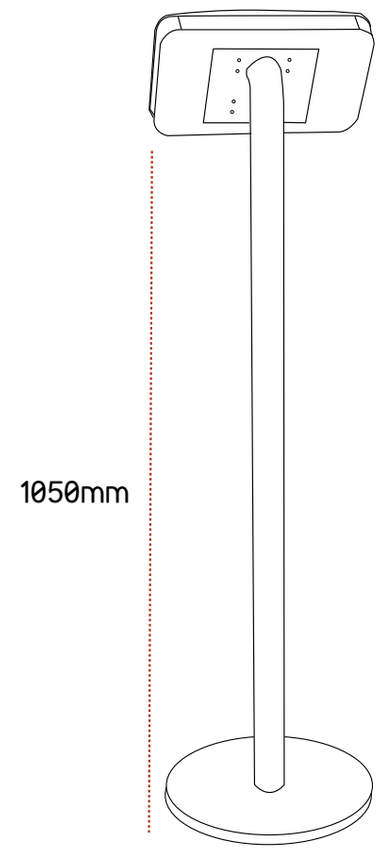

IPAD is a trademark of Apple Inc., registered in the U.S. and other countries

Yupad Floor
Kiosk measures

OEMKIOSKS
DIGITAL KIOSKS FOR THE WORLD®

CE

Yupad

Technical data

Dimensions:

- A210xW320xD37

Weight:

10 kg

Configuration:

- AISI304 Painted steel and Stainless steel
- Steel plate of 1,5mm to 2mm
- Glossy widescreen Multi-Touch 9.7-inch (diagonal) LED-backlit IPS technology.

Computer (with Ipad)

- IPAD
- A4 Apple Chip 1 GHZ, high performance and low power consumption
- H.264 video up to 720p, 30 frames per second, Main Profile Level 3.1 with AAC-LC up to 160 Kbps

OEMKIOSKS
DIGITAL KIOSKS FOR THE WORLD®

CE

IPAD is a trademark of Apple Inc., registered in the U.S. and other countries

Yupad
Technical data

oemKIOSKS | Your white label kiosk company

This document is provided only for information purposes. The presented information is subject to change without prior notice, given the constant evolution of content.
THE PARTTEAM GROUP is not responsable for any errors or omissions in this document, based on the information it contains, as a result of its publication.

OEMKIOSKS
DIGITAL KIOSKS FOR THE WORLD®

oemKIOSKS | Partteam Group Portugal | Rua Nova da Nespereira, Pavihão 10 | 4770 -287 Lagoa - Vila Nova de Famalicão
tel: +351 252 378 589 | +351 252 327 185 | fax: + 351 252 378 591 | Portugal
www.oemkiosks.com | oem@oemkiosks.com